Newsletter nem

APRIL 2013

Copyright© 2013 NEM srl - All rights reserved

THE NEW 085 HAND GRIP!

The new 085 hand grip has been designed in such a way as to make it user-friendly, easy to install, extremely versatile and functional.

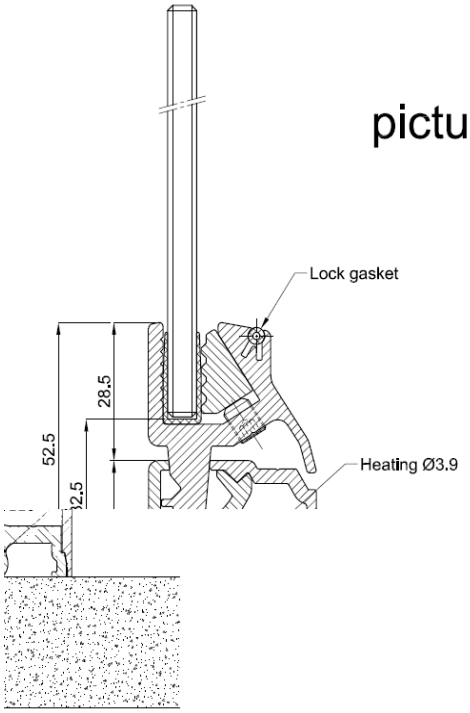

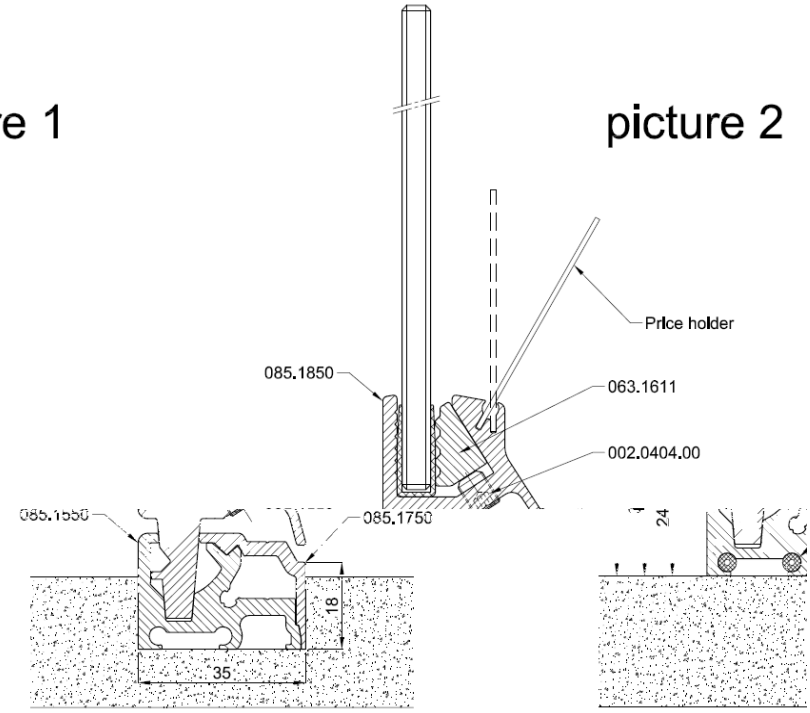

This new product can be either installed on the rest bench (picture 1) or partly embedded in it (picture 2); moreover, it makes the cleaning and maintenance of each part of it possible, including the replacement (if any) of the glass, with no need to disassemble the whole part, even if there are two or more in-line glasses (picture 3) or side panels (picture 4).

Moreover, the new hand grip can be used for the assembly of both the front and the side glasses, thus realizing – with a single profile system – a structure which is closed on three sides (picture 5).

Nem srl – Via Redipuglia n.16 Z.I.
34070 San Pier d'Isonzo (GO) – ITALY
Tel. +39 (0481) 70297 – Fax +39 (0481) 70275
Email : nem@nemsrl.it Web : http://www.nemsrl.it

picture 3

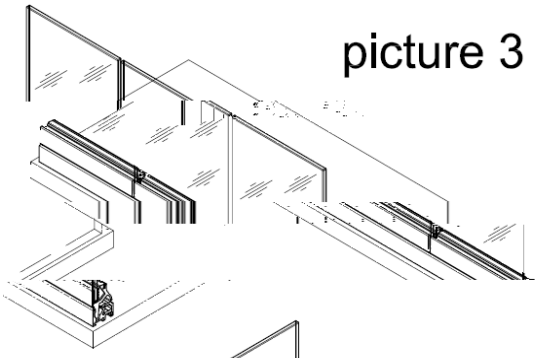

picture 4

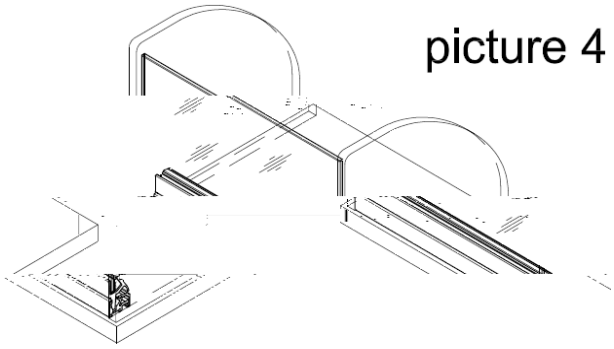

picture 5

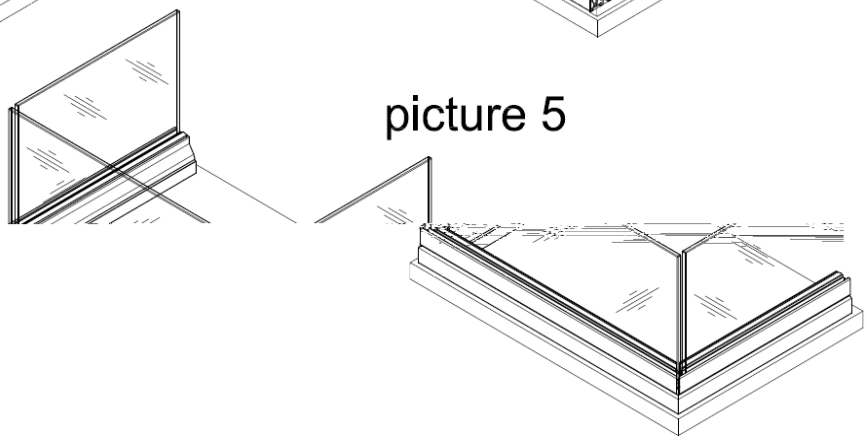

picture 6

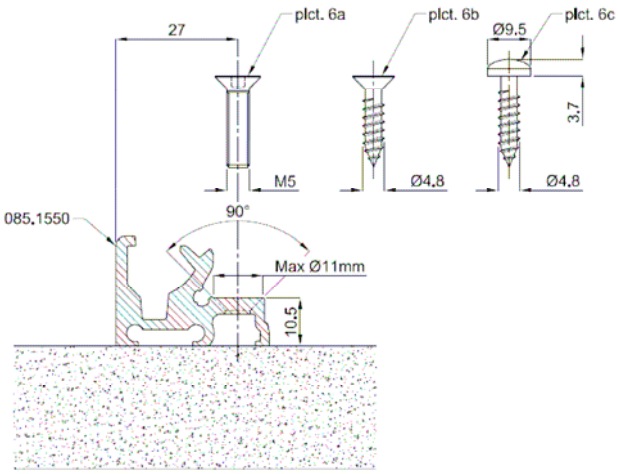

The 085.1550 base profile is easily installed on your counter using screws TSPEI M5 (picture 6a) or, alternatively, self tapping countersunk screws (UNI ISO 1482; UNI ISO 1483; UNI ISO 7050 or UNI ISO 7051), diameter 4.8mm (picture 6b).

Fixing is also possible through self-tapping pan head screws (UNI ISO 1481 or UNI ISO 7049), diameter 4.8mm (picture 6c), thus making only through holes on 085.1550 profile, with no need to make any counterbored holes.

picture 7

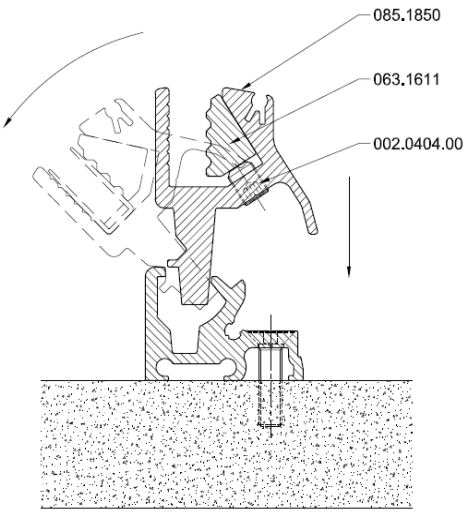

Once the 085.1550e base profile has been fixed, it is necessary to insert the 085.1850 hand grip profile, on which the screws STEI M6x8 (code 002.0404.00) have already been screwed; as to the insert profile, it can be inserted later, immediately before the glass.

It is possible to insert the 085.1850 hand grip from above (as shown in picture 7) or from one side, making said profile slide on its seat into the 085.1550 profile.

The covering/locking profile (code 085.1750) is the last one to be installed: it has to be positioned while the hand grip 085.1850 is held open (picture 8).

Nem srl – Via Redipuglia n.16 Z.I.
34070 San Pier d'Isonzo (GO) – ITALY
Tel. +39 (0481) 70297 – Fax +39 (0481) 70275
Email : nem@nemsrl.it Web : http://www.nemsrl.it

picture 8

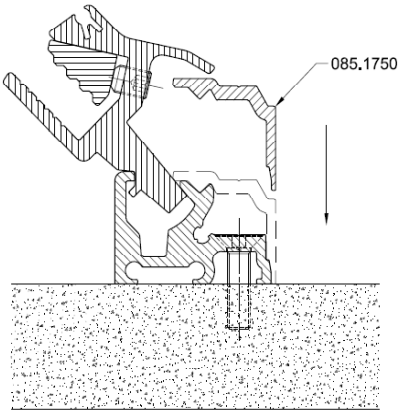

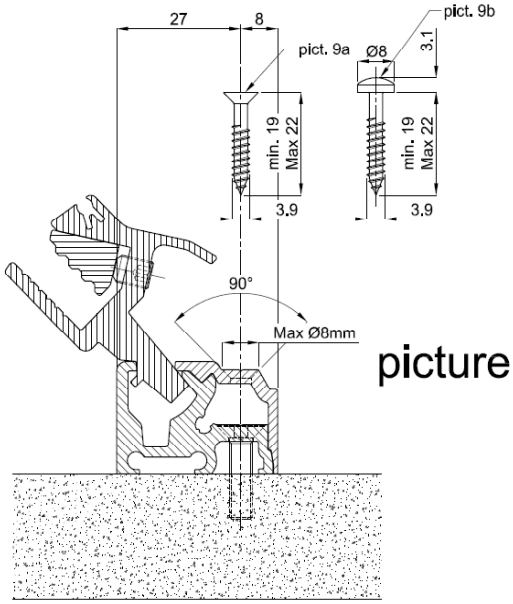

picture 9

The 085.1750 profile, already properly pre-bored, can be fixed on the base profile, code 085.1550, using self tapping countersunk screws (UNI ISO 1482; UNI ISO 1483; UNI ISO 7050 or UNI ISO 7051), diameter 3.9mm (picture 9a). As per the base profile, the cover profile can too be fixed with self-tapping pan head screws (UNI ISO 1481 or UNI ISO 7049), max. diameter 3.9mm (picture 9b), therefore with no need to make any counterbored holes.

Once this has been done, the glass has to be installed, using the 040.0099.00-code gasket.
When the glass has been correctly positioned, it has to be fixed by tightening the STEI M6x8 screws (cod 002.0404.00), using a 3-mm allen key (picture 10).

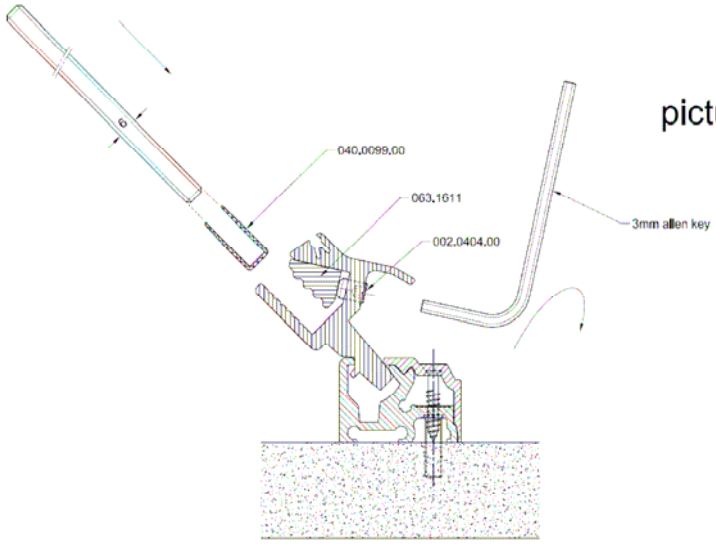

picture 10

The maximum opening of the glass is 45° (picture 11).

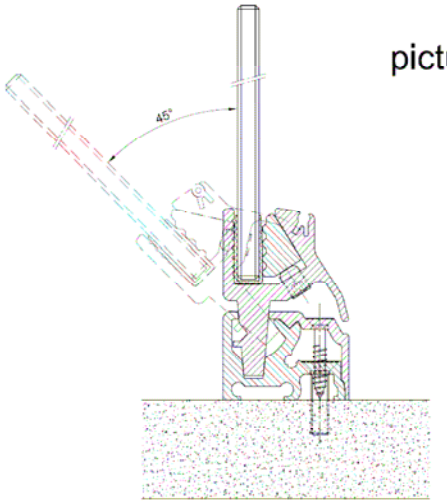

picture 11

To get the price for you of new items and their availability and/or technical details, our Sales Dept. and our R&D Dept. will be at your disposal.

Best regards.

Nem srl – Via Redipuglia n.16 Z.I.
34070 San Pier d'Isonzo (GO) – ITALY
Tel. +39 (0481) 70297 – Fax +39 (0481) 70275
Email : nem@nemsrl.it Web : http://www.nemsrl.it